NO REPRESENTATION OR WARRANTY, EXPRESSED OR IMPLIED, IS MADE AS TO THE ACCURACY, COMPLETENESS OR USEFULNESS OF THE INFORMATION OR STATEMENTS CONTAINED IN THESE DRAWINGS, OR THAT THE DISCLOSURE OF ANY INFORMATION, APPARATUS, METHOD OR PROCESS DISCLOSED IN THESE DRAWINGS MAY NOT INFRINGE PRIVATE RIGHTS OF OTHERS. NO LIABILITY IS ASSUMED WITH RESPECT TO THE USE OF, OR FOR DAMAGES RESULTING FROM THE USE OF, ANY INFORMATION, APPARATUS, METHOD OR PROCESS DISCLOSED IN THESE DRAWINGS. DRAWINGS MADE AVAILABLE FOR INFORMATION TO BIDDER ARE NOT TO BE USED FOR OTHER PURPOSES AND ARE TO BE RETURNED UPON REQUEST OF THE FORWARDING CONTRACTOR.

REVISIONS

REV	TYPE	DESCRIPTION OF CHANGE	DES	DET	CK	ENG	TL	GL	CE	VER	DATE
0		ORIGINAL ISSUE									

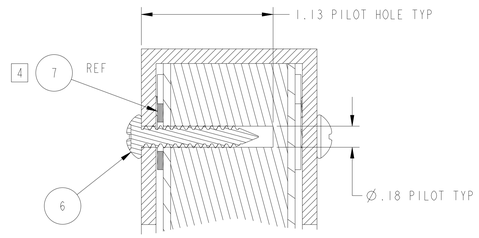

SECTION B-B
SCALE 2/1

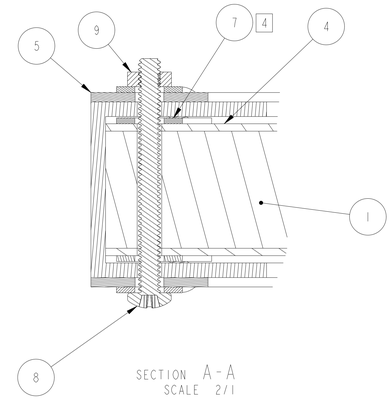

SECTION A-A
SCALE 2/1

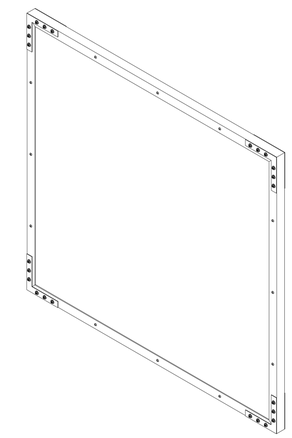

SCALE 1/8

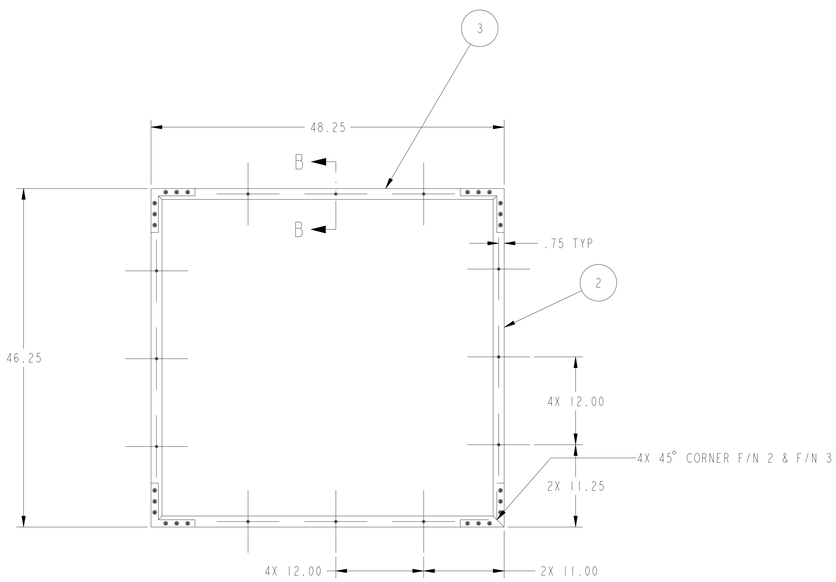

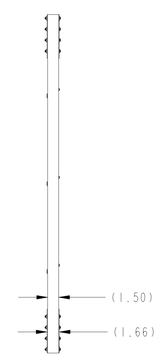

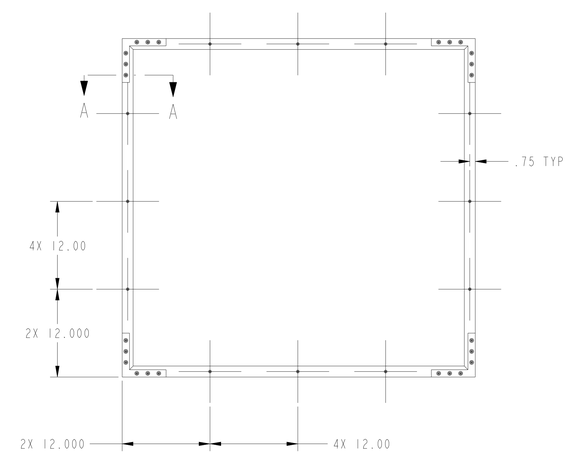

NOTES:

1. McMASTER CARR
   404-346-7000
   MCMASTER.COM
2. ONLINE METALS.COM
   800-704-2157
3. SHIELDWERX LLC
   505-892-5144
   WWW.SHIELDWERX.COM
4. F/N7 (WASHERS) ARE USED TO REMOVE SPACE BETWEEN F/N 2 AND F/N 4 SPACE BETWEEN F/N 3 AND F/N 4

	FIND NO.	QTY	PART OR IDENTIFYING NUMBER	DESCRIPTION OR NOMENCLATURE	MATERIAL / SPECIFICATION
1	9	24	90480A011	NUT, 10-24 X 1/8" HEIGHT	STEEL ZINC-PLATED
1	8	24	90272A253	#10 -24 UNC PAN HEAD 2" LONG	ZINC PLATED STEEL ---
4 1	7	120	90108A411	WASHER 1/4" ID 9/16"OD FLAT	ZINC PLATED STEEL --
1	6	24	90190A247	#10 PAN HEAD SHEET METAL SCREW 1" LONG	ZINC PLATED STEEL ---
1	5	8	1558A23	L SHAPE BRACKET 6" LONG	--- ---
2	4	2	FUND13N3HE55M8U8713A005-04	48" x 46" x .062 THK SHEET	ALUMINUM 6061-T6 ASTM B209
2	3	2	FUND13N3HE55M8U8713A005-03	1-1/2 ARCHITECTURAL CHANNEL	ALUMINUM 6063-T52 ASTM B221
2	2	2	FUND13N3HE55M8U8713A005-02	1-1/2 ARCHITECTURAL CHANNEL	ALUMINUM 6063-T52 ASTM B221
3	1	1	FUND13N3HE55M8U8713A005-01	SWX-201 48" X 46" X 1" THK SHEET	5% BORATED POLYETHYLENE ---

PARTS LIST

TOTAL WEIGHT 129 LBS

QUALITY VERIFICATION	
DOCUMENTS REQUIRED	APPLICABLE
MATERIAL MILL TEST REPORT	
LEAK TEST REPORT	
CLEANING CERT	
WELD / BRAZE INSPECTION REPORT	
HEAT TREAT REPORT (W/CHART)	
DIMENSIONAL REPORT	
MATERIAL SELLER CERT	
FUNCTIONAL TEST REPORT	
DEVIATION REQUEST	X
NONCONFORMANCE REPORT	X
QA REP	DATE

FUND13N3HE55M8U8713A001
NEXT USED ASSEMBLIES

DIMENSIONS ARE IN INCHES
DRAFTING STANDARD: ASME Y14.100
DIMENSIONING AND TOLERANCING IN ACCORDANCE WITH ASME Y14.5M,2009
DO NOT SCALE DRAWING

DEFAULT TOLERANCES

LINEAR	ANGULAR
X.XX ±.01	±.5°
X.XXX ±.005	

REMOVE ALL BURRS AND BREAK SHARP EDGES: .060
SURFACE ROUGHNESS: 125 RMS MAX
THIRD ANGLE PROJECTION

APPROVALS

DESIGNER		DATE
DETAILER	S ROY	DATE 7/7/2014
CHECKER		DATE
ENGINEER	Jack Thomson 2014.07.24 10:08:39 -04'00'	DATE
TEAM LEAD	Christopher Crawford 2014.07.24 08:54:44 -04'00'	DATE
GROUP LEAD	Seppo I. Penttila	DATE
CHIEF ENGR		DATE
VERIFIER		DATE
CONTROL SYSTEM	4	RELEASE
3NS PROCEDURE	NFDD-ENG-001	

THIS DRAWING IS THE PROPERTY OF
OAK RIDGE NATIONAL LABORATORY
DEPARTMENT OF ENERGY UNDER U.S. GOVERNMENT CONTRACT DE-AC05-00OR22725
OAK RIDGE, TENNESSEE

NEUTRON SCIENCES

N3HE EXPERIMENT NEUTRON SHIELDING UPPER PANEL ASSEMBLY

SIZE	DRAWING NUMBER	REV
E	FUND13N3HE55M8U8713A005	0

SCALE	CAD MODEL	MODEL REV	SHEET
1/8	FUND13N3HE55M8U8713A005	0	1 of 1

THIS DRAWING PREPARED ON Pro/ENGINEER

DWG NO. FUND13N3HE55M8U8713A005 SH 1